TOP SCREW METAL CORP.

Clinching Parts

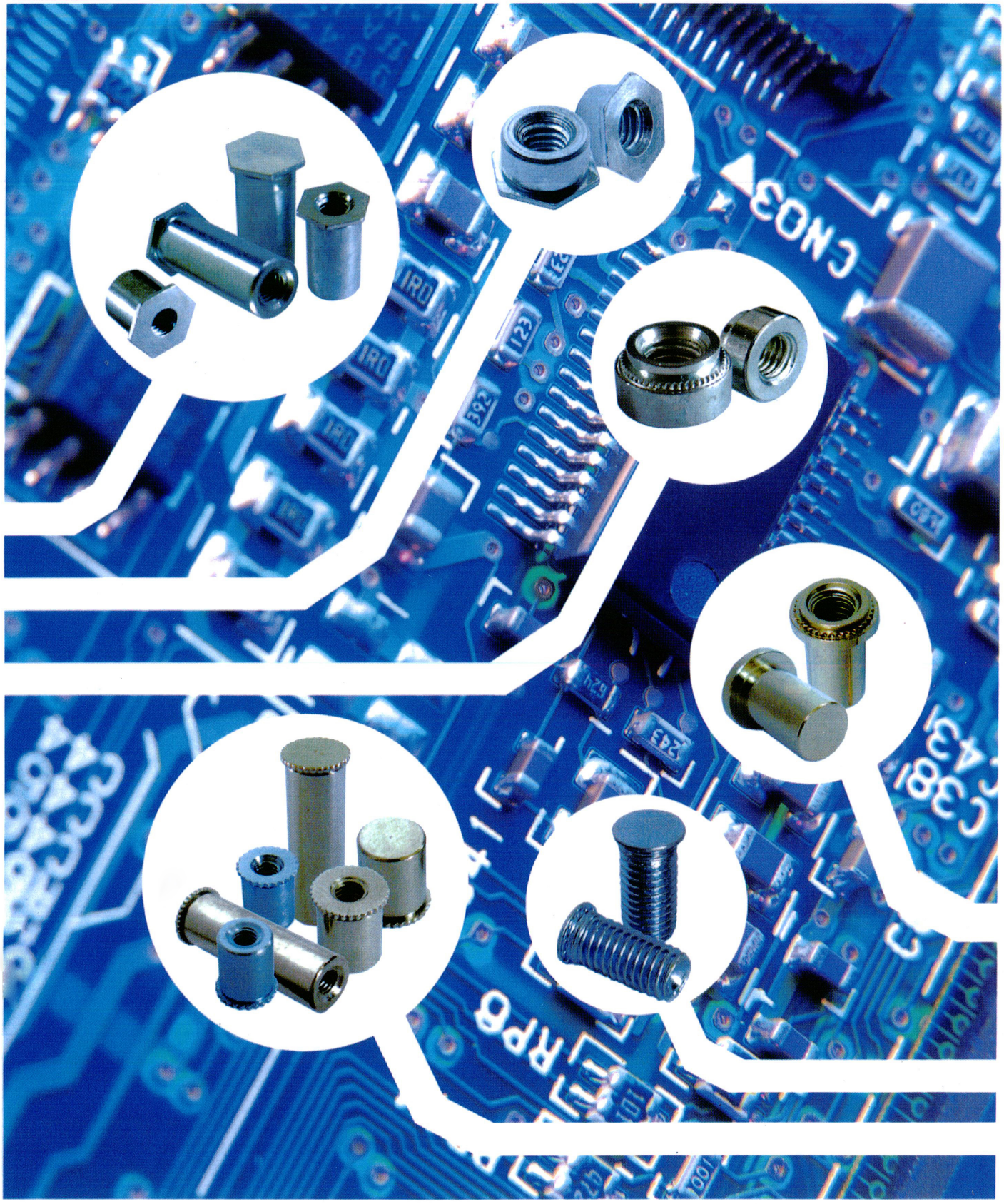

TSC1

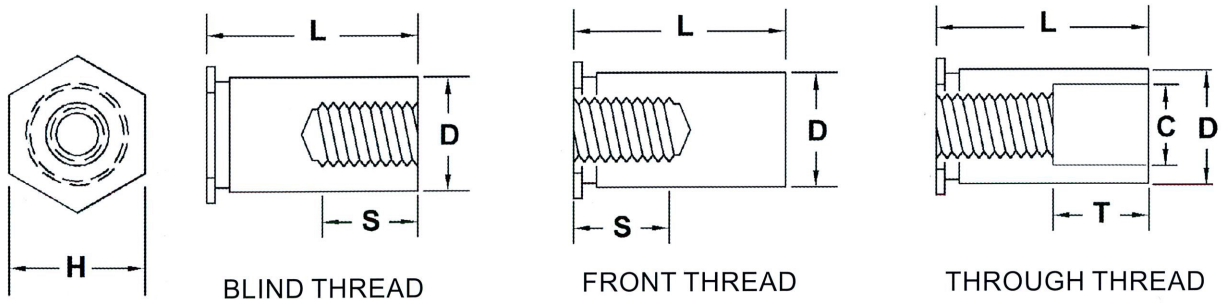

INSTALLATION & PERFORMANCE DATA										
SHEET MATERIAL: 1.5mm 5052-H34 ALUMINUM						SHEET MATERIAL: 1.5mm 5 COLD-ROLLED STEEL				
PART NO .	STANDOFF MATERIAL	INSTALLATION (kN)	PUSHOUT (N)	TORQUE-OUT (N_m)	PULL THROUGH (N)	INSTALLATION (kN)	PUSHOUT (N)	TORQUE-OUT (N_m)	PULL THROUGH (N)	REC TIGHTEN TORQUE MAX. (N_m)
350	STEEL	4.7	700	1.2	1230	9.6	990	2.1	1450	0.5
	STAINLESS STEEL	4.7	700	1.2	985	9.6	990	2.1	1150	0.4
	ALUMINUM	4.7	700	1.2	740	NR	NR	NR	NR	0.3
350B	STEEL	7.4	1310	2.79	1350	14.5	1850	3.9	1670	0.5
	STAINLESS STEEL	7.4	1310	2.79	1100	14.5	1850	3.9	1350	0.4
	ALUMINUM	7.4	1310	2.79	810	NR	NR	NR	NR	0.3
470 580	STEEL	10.5	1750	5.01	2550	17.6	2460	8.45	3100	1.9, 3.4
	STAINLESS STEEL	10.5	1750	5.01	2020	17.6	2460	8.45	2450	0.9, 2.7
	ALUMINUM	10.5	1750	5.01	1525	NR	NR	NR	NR	1.1, 2.1
SHEET MATERIAL: .060 IN. 5052-H34 ALUMINUM						SHEET MATERIAL: .060 IN. COLD-ROLLED STEEL				
PART NO .	STANDOFF MATERIAL	INSTALLATION (LBS.)	PUSHOUT (LBS.)	TORQUE-OUT (IN.-LBS.)	PULL THROUGH (LBS.)	INSTALLATION (LBS.)	PUSHOUT (LBS.)	TORQUE-OUT (IN.-LBS.)	PULL THROUGH (LBS.)	REC TIGHTEN TORQUE MAX. (IN.-LBS.)
440	STEEL	1075	155	10	270	2100	220	18	225	4.7
	STAINLESS STEEL	1075	155	10	220	2100	220	18	260	3.6
	ALUMINUM	1075	155	10	160	NR	NR	NR	NR	2.7
440B 632	STEEL	1680	290	24	300	3200	410	32	375	4.6, 8.6
	STAINLESS STEEL	1680	290	24	235	3200	410	32	300	3.6, 6.8
	ALUMINUM	1680	290	24	180	NR	NR	NR	NR	2.7, 5.1
632B 832 1032	STEEL	2350	380	44	560	3900	550	72	690	8.6, 17, 30
	STAINLESS STEEL	2350	380	44	450	3900	550	72	550	6.8, 13, 24
	ALUMINUM	2350	380	44	180	NR	NR	NR	NR	5.2, 10, 17

NR-NOT RECOMMENDED.

RECOMMENDED INSTALLATION PROCEDURE

1. INSERT STANDOFF THROUGH HOE IN SHEET INTO ANVIL.

2. APPLY ONLY SUFFICIENT SQUEEZING FORCE BETWEEN PARALLEL SURFACES OF PUNCH AND ANVIL TO EMBED HEX HEAD FLUSH IN SHEET. AVOID EXCESSIVE PRESSURES.

TSC1

DIMENSIONS & SPECIFICATIONS (MILLIMETERS)

THREAD SIZE	PART NO.	L LENGTH + .05 / - .13												+.08 -.00	D DIM +.00 -.13	H HEX DIM (NOM.)	C COUNTER-BORE ± 0.13	MIN	MIN
M3x0.5	350	3	4	6	8	10	12	14	16	18	20	22	25	4.2	4.19	4.8	3.2	6.0	1.0
	350B	3	4	6	8	10	12	14	16	18	20	22	25	5.4	5.38	6.4	3.2	7.0	1.0
M3.5x0.6	356	3	4	6	8	10	12	14	16	18	20	22	25	5.4	5.38	6.4	4.0	7.0	1.0
M4x0.7	470	3	4	6	8	10	12	14	16	18	20	22	25	7.14	7.12	7.9	4.8	8.0	1.3
M5x0.8	580	3	4	6	8	10	12	14	16	18	20	22	25	7.14	7.12	7.9	5.2	8.0	1.3
S DIM. MIN.				3.2	4.0		5.0	6.5		9.5									
T ± 0.40		NONE				4.0			8.0			11.0							

DIMENSIONS & SPECIFICATIONS (INCH)

THREAD SIZE	PART NO.	L LENGTH + 0.002 / - 0.005																+.003 -.000	D DIM +.000 -.005	H HEX DIM (NOM.)	C COUNTER-BORE ± .005	MIN	MIN
#4-40	440	.125	.1875	.250	.3125	.375	.4375	.500	.5625	.625	.6875	.750	.8125	.875	.9375	1.0	1.0625	.166	.165	.1875	.125	.23	.04
	440B	.125	.1875	.250	.3125	.375	.4375	.500	.5625	.625	.6875	.750	.8125	.875	.9375	1.0	1.0625	.213	.212	.25	.125	.27	.04
#6-32	632	.125	.1875	.250	.3125	.375	.4375	.500	.5625	.625	.6875	.750	.8125	.875	.9375	1.0	1.0625	.213	.212	.25	.156	.27	.04
	632B	.125	.1875	.250	.3125	.375	.4375	.500	.5625	.625	.6875	.750	.8125	.875	.9375	1.0	1.0625	.281	.280	.3125	.156	.31	.05
#8-32	832	.125	.1875	.250	.3125	.375	.4375	.500	.5625	.625	.6875	.750	.8125	.875	.9375	1.0	1.0625	.281	.280	.3125	.188	.31	.05
#10-32	1032	.125	.1875	.250	.3125	.375	.4375	.500	.5625	.625	.6875	.750	.8125	.875	.9375	1.0	1.0625	.281	.280	.3125	.203	.31	.05
S DIM. MIN.		FULL THREAD			.1563		.1875	.25			.375												
T ± 0.0156		FULL THREAD				.1875			.3125				.4375										

TSC5

Self-Clinching Lock Nuts

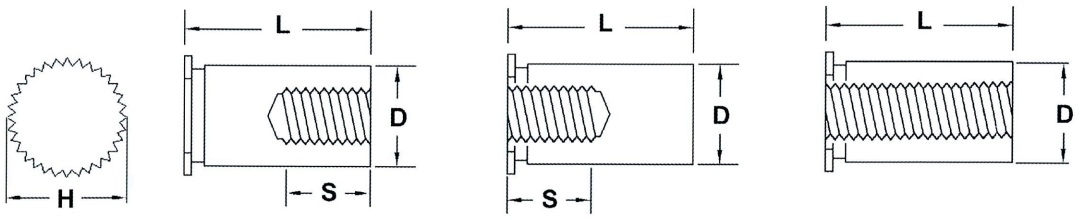

BLIND THREAD FRONT THREAD THROUGH THREAD

DIMENSIONS & SPECIFICATIONS (MILLIMETERS)

THREAD SIZE	L LENGTH ± 0.20									H ± 0.20	+0.08 -0.00	D +0.00 -0.08	MIN
M3x0.5	4	6	8	10	12	14	16	18	20	7.20	6.19	6.18	1.0
M4x0.7		6	8	10	12	14	16	18	20	8.20	7.20	7.18	1.0
M5x0.8			8	10	12	14	16	18	20	8.20	7.20	7.18	1.0
S	**2**	**3**	**4**	**6**	**8**	**8**	**8**	**8**	**8**				

TSC4 Self-Clinching Nuts

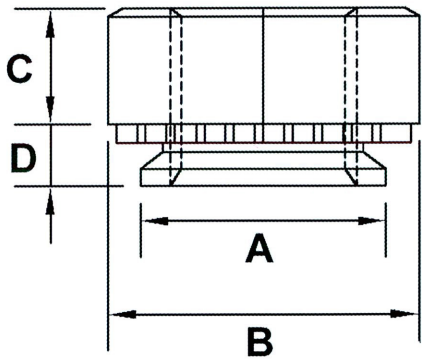

DIMENSIONS & SPECIFICATIONS (MILLIMETERS)								
THREAD SIZE	PART NO.	D MAX.	MIN.	+0.080 -0.000	A MAX.	B ±0.25	C ±0.25	MIN.
M2x0.4	2401	0.76	0.8	4.25	4.22	6.3	1.5	4.8
	2402	0.97	1.0					
	2403	1.37	1.4					
	2404	2.21	2.3					
M2.5x0.45	2501	0.76	0.8	4.25	4.22	6.3	1.5	4.8
	2502	0.97	1.0					
	2503	1.37	1.4					
	2504	2.21	2.3					
M3x0.5	3501	0.76	0.8	4.25	4.22	6.3	1.5	4.8
	3502	0.97	1.0					
	3503	1.37	1.4					
	3504	2.21	2.3					
M3.5x0.6	3561	0.76	0.8	4.75	4.73	7.1	1.5	5.6
	3562	0.97	1.0					
	3563	1.37	1.4					
	3564	2.21	2.3					
M4x0.7	4701	0.76	0.8	5.4	5.38	7.9	2.0	6.9
	4702	0.97	1.0					
	4703	1.37	1.4					
	4704	2.21	2.3					
M5x0.8	5801	0.76	0.8	6.4	6.38	8.7	2.0	7.1
	5802	0.97	1.0					
	5803	1.37	1.4					
	5804	2.21	2.3					
M6x1.0	6101	1.37	1.4	8.75	8.72	11.05	4.08	8.6
	6102	2.21	2.3					
	6103	3.05	3.2					
M8x1.25	81251	1.37	1.4	10.5	10.44	12.65	5.47	9.7
	81252	2.21	2.3					
	81253	3.05	3.2					
M10x1.5	10151	2.21	2.3	14.0	13.94	17.35	7.48	13.5
	10152	3.05	3.2					
	10153	6.00	6.4					

TSC4

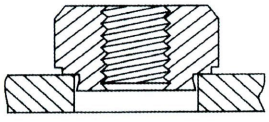

Fasteners must be installed squarely in hole.

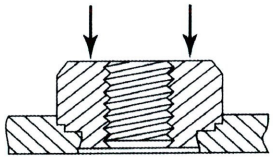

Squeezing force is applied to head of fastener

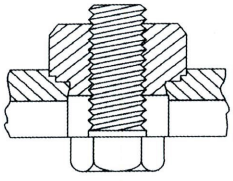

Install bolt or screw from opposite side to head of fastener

DIMENSIONS & SPECIFICATIONS (INCH)								
THREAD SIZE	PART NO.	D MAX.	MIN.	+0.003 -0.000	A MAX.	B ±0.01	C ±0.01	MIN.
#2-56	256-1	0.030	0.030	0.166	0.165	0.250	0.070	0.19
	256-2	0.038	0.040					
	256-3	0.054	0.056					
	256-4	0.087	0.091					
#3-48	348-1	0.030	0.030	0.166	0.165	0.250	0.070	0.19
	348-2	0.038	0.040					
	348-3	0.054	0.056					
	348-4	0.087	0.091					
#4-40	440-1	0.030	0.030	0.166	0.165	0.250	0.070	0.19
	440-2	0.038	0.040					
	440-3	0.054	0.056					
	440-4	0.087	0.091					
#6-32	632-1	0.030	0.030	0.1875	0.187	0.281	0.070	0.22
	632-2	0.038	0.040					
	632-3	0.054	0.056					
	632-4	0.087	0.091					
#8-32	832-1	0.030	0.030	0.213	0.212	0.312	0.090	0.27
	832-2	0.038	0.040					
	832-3	0.054	0.056					
	832-4	0.087	0.091					
#10-24	1024-1	0.030	0.030	0.250	0.249	0.344	0.090	0.28
	1024-2	0.038	0.040					
	1024-3	0.054	0.056					
	1024-4	0.087	0.091					
#10-32	1032-1	0.030	0.030	0.250	0.249	0.344	0.090	0.28
	1032-2	0.038	0.040					
	1032-3	0.054	0.056					
	1032-4	0.087	0.091					
#12-24	1224-1	0.038	0.040	0.277	0.276	0.380	0.130	0.31
	1224-2	0.054	0.056					
	1224-3	0.087	0.091					
1/4-20	420-1	0.054	0.056	0.344	0.343	0.437	0.170	0.34
	420-2	0.087	0.091					
	420-3	0.120	0.125					
1/4-28	428-1	0.054	0.056	0.344	0.343	0.437	0.170	0.34
	428-2	0.087	0.091					
	428-3	0.120	0.125					
5/16-18	518-1	0.054	0.056	0.413	0.412	0.500	0.230	0.38
	518-2	0.087	0.091					
	518-3	0.120	0.125					
5/16-24	524-1	0.054	0.056	0.413	0.412	0.500	0.230	0.38
	524-2	0.087	0.091					
	524-3	0.120	0.125					
3/8-16	316-1	0.087	0.091	0.500	0.499	0.562	0.270	0.44
	316-2	0.120	0.125					
	316-3	0.235	0.250					
3/8-24	324-1	0.087	0.091	0.500	0.499	0.562	0.270	0.44
	324-2	0.120	0.125					
	324-3	0.235	0.250					

TSC4

INSTALLATION & PERFORMANCE DATA							
		COLD-ROLLED STEEL			5052-H34 ALUMINUM		
THREAD SIZE	SHANK CODE	INSTALLATION FORCE (kN)	PUSHOUT (N)	TORQUE-OUT (N_m)	INSTALLATION FORCE (kN)	PUSHOUT (N)	TORQUE-OUT (N_m)
M2x0.4 M2.5x0.45 M3x0.5	-1 -2 -3 -4	11.2-15.6	456 545 1010 1100	2.1	6.7-8.9	275 390 745 850	0.9 1.1 1.4 1.4
M3.5x0.6	-1 -2 -3 -4	13.4-26.7	475 565 1200 1300	1.8 1.8 2.3 2.5	11.2-13.4	290 465 965 1050	1.8 1.9 2.5 2.8
M4x0.7	-1 -2 -3 -4	18-27	485 640 1245 1300	2.9 2.95 4.2 4.2	11.2-13.4	290 465 965 1100	2.3 2.6 4.0 4.0
M4x0.8	-1 -2 -3 -4	18-38	525 790 1400 1500	3.6 3.6 6.0 6.0	11.2-15.6	290 475 1180 1225	3.0 3.6 4.7 5.7
M6x1.0	-1 -2 -3	27-36	1755	11.8	18-32	1570	11.8
M8x1.25	-1 -2 -3	27-36	1860	26.0	18-32	1560	23.7
M10x1.0	-1 -2 -3	32-50	2000	36.2	22-36	1750	32.7

INSTALLATION & PERFORMANCE DATA							
		COLD-ROLLED STEEL			5052-H34 ALUMINUM		
THREAD SIZE	SHANK CODE	INSTALLATION FORCE (TONS)	PUSHOUT (LBS.)	TORQUE-OUT (IN. -LBS.)	INSTALLATION FORCE (TONS)	PUSHOUT (LBS.)	TORQUE-OUT (IN. -LBS.)
#2-56 #3-48 #4-40	-1 -2 -3 -4	1-2	100 120 225 225	13 14 17 18	0.5-1	60 89 169 169	8 9.5 12 12
#6-32	-1 -2 -3 -4	1.5-3	105 125 270 270	15 19 27 27	1-2	60 90 185 185	16 17 21 21
#8-32	-1 -2 -3 -4	2-3	105 140 280 280	25 34 44 44	1-2	65 100 215 215	21 23 32 32
#10-24 #10-32	-1 -2 -3 -4	2-4.5	115 175 315 315	31 39 59 59	1-2	65 105 245 245	25 31 49 49
#12-24	-1 -2 -3	3-4	195 345 345	73 79 79	2-3.25	115 280 280	62 69 69
1/4-20 1/4-28	-1 -2 -3	3-4	395 395 395	145 145 145	2-3.5	355 355 355	85 120 120
5/16-18 5/16-24	-1 -2 -3	3-4	420 420 420	160 175 175	2-3.5	375 375 375	115 155 155
3/8-16 3/8-24	-1 -2 -3	3.5-5.5	455 455 455	315 315 315	2.5-4	395 395 395	265 265 265

TSC6

Self-Clinching Studs

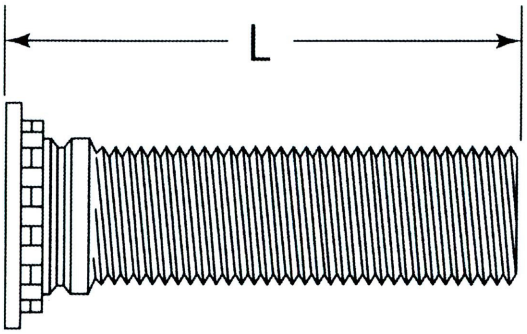

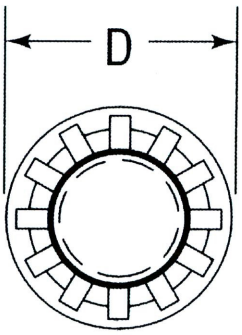

DIMENSIONS & SPECIFICATIONS (MILLIMETERS)

THREAD SIZE	PART NO.	L LENGTH ± 0.4													D ± 0.4	+0.08 -0.00	MAX. REC. NUT TIGHT. TORQUE N.m	MIN	MIN
M2.5x0.45	2545	6	8	10	12	15	18								4.1	2.5	0.40	5.4	1.0
M3x0.5	350	6	8	10	12	15	18	20	22	25					4.6	3.0	0.72	5.6	1.0
M3.5x0.6	356	6	8	10	12	15	18	20	22	25	28	30			5.3	3.5	1.10	6.4	1.0
M4x0.7	470	6	8	10	12	15	18	20	22	25	28	30	35	38	5.9	4.0	1.60	7.2	1.0
M5x0.8	580		8	10	12	15	18	20	22	25	28	30	35	38	6.5	5.0	3.40	7.2	1.0
M6x1.0	610			10	12	15	18	20	22	25	28	30	35	38	8.2	6.0	5.70	7.9	1.6
M8x1.25	8125				12	15	18	20	22	25	28	30	35	38	9.6	8.0	14.0	9.6	2.4

DIMENSIONS & SPECIFICATIONS (INCH)

THREAD SIZE	PART NO.	L LENGTH ± 0.015										D ±0.015	+0.003 -0.000	MAX. REC. NUT TIGHT. TORQUE IN.-LBS	MIN	MIN
#2-56	256	0.250	0.3125	0.375	0.500	0.625	0.750					0.144	0.085	2.5	0.187	0.040
#4-40	440	0.250	0.3125	0.375	0.500	0.625	0.750	0.875	1.00			0.176	0.111	5	0.219	0.040
#6-32	632	0.250	0.3125	0.375	0.500	0.625	0.750	0.875	1.00	1.25	1.50	0.206	0.137	10	0.250	0.040
#8-32	832	0.250	0.3125	0.375	0.500	0.625	0.750	0.875	1.00	1.25	1.50	0.237	0.163	15	0.281	0.040
#10-24	1024		0.3125	0.375	0.500	0.625	0.750	0.875	1.00	1.25	1.50	0.256	0.189	25	0.281	0.040
#10-32	1032		0.3125	0.375	0.500	0.625	0.750	0.875	1.00	1.25	1.50	0.256	0.189	30	0.281	0.040
1/4-20	420			0.375	0.500	0.625	0.750	0.875	1.00	1.25	1.50	0.337	0.249	55	0.312	0.062
5/16-18	518				0.500	0.625	0.750	0.875	1.00	1.25	1.50	0.376	0.311	115	0.375	0.093

_MATERIAL: STEEL
_FINISH: ZINC PLATED.
_OTHER MATERIALS ARE AVAILABLE UPON REQUEST.

Self-Clinching TSC6 Studs

INSTALLATION & PERFORMANCE DATA

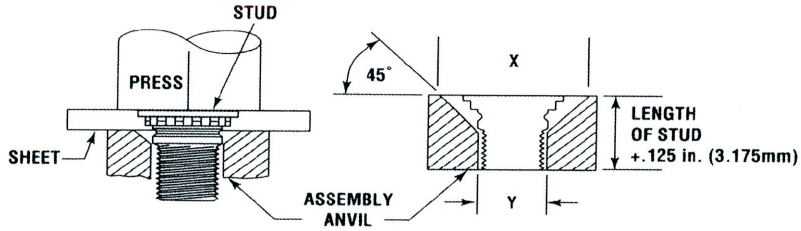

NOTE 1.

FOR MATERIAL THICKNESS OF 0.059 IN (1.51MM) OR LESS, A COUNTERSUNK HOLE IS NEEDED IN THE ANVIL.

TOOLING FOR SHEET THICKNESS 0.059 IN. (1.51MM) AND LESS WITH #2 (M2.5) THRU #10 (M5) THREAD SIZE AND LESS THAN 0.093 (2.3MM) FOR 1/4 IN. (M6) THREADS

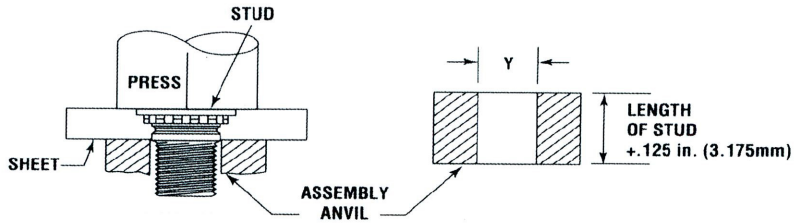

NOTE 2.

FOR MATERIAL THICKNESS OF 0.060 IN. (1.51MM) OR MORE, A THROUGH-HOLE IS NEEDED IN THE ANVIL.

TOOLING FOR SHEET THICKNESS 0.060 IN. (1.51MM) MINIMUM AND GREATER WITH #2 (M2.5) THRU #10 (M5) THREAD SIZES AND 0.092 IN. (2.3MM) MINIMUM AND GREATER FOR 1/4 IN. (M6) AND 5/16 IN. (M8) THREADS.

PART NO. (MILLIMETERS)	ANVIL DIMENSIONS(MM) X +0.1	ANVIL DIMENSIONS(MM) Y +0.08	PART NO. (INCH)	ANVIL DIMENSIONS(INCH) X +0.004	ANVIL DIMENSIONS(INCH) Y +0.003
2345	3.1	2.50	256	0.110	0.087
				0.114	0.090
350	3.6	3.00	440	0.136	0.113
				0.140	0.116
356	4.1	3.50	632	0.162	0.139
				0.166	0.142
470	4.6	4.00	832	0.188	0.165
				0.192	0.168
580	5.6	5.00	1024	0.216	0.191
				0.220	0.194
610	6.6	6.00	1032	0.216	0.191
825	–	8.00	420	0.295	0.250
				0.300	0.253
			518		0.3125
				–	0.3125

Self-Clinching TSC7 Standoffs (for thin sheet metal)

DIMENSIONS & SPECIFICATIONS (MILLIMETERS)

THREAD SIZE	PART NO.	L LENGTH ±0.08 TYPE S				TYPE ST		TYPE SC					+.08 -.00	D DIM +.00 -.13	S MIN. THREAD DEPTH	H NOM.	MIN.	MIN.
M2.5x0.45	2545	2	3	4	6	8	10	12	14	16	18	19	4.2	4.19	5.2	4.8	0.63	5.8
	2545B												5.4	5.38		6.4	0.63	7.1
M3.0x0.50	350	2	3	4	6	8	10	12	14	16	18	19	4.2	4.19	6.2	4.8	0.63	5.8
	350B												5.4	5.38		6.4	0.63	7.1
M3.5x0.60	356		2	3	4	6	8	10	12	14	16	18	5.4	5.38	7.0	6.4	0.63	7.1

DIMENSIONS & SPECIFICATIONS (INCH)

THREAD SIZE	PART NO.	L LENGTH ±0.08 TYPE S				TYPE ST		TYPE SC					+.08 -.00	D DIM +.00 -.13	S MIN. THREAD DEPTH	H NOM.	MIN.	MIN.
#2-56	256	0.09	0.125	0.187	0.250	0.312	0.375	0.437	0.500	0.562	0.625	0.687	0.166	0.165	0.200	0.187	0.025	0.23
	256B												0.213	0.212		0.250	0.025	0.27
#4-40	440	0.09	0.125	0.187	0.250	0.312	0.375	0.437	0.500	0.562	0.625	0.687	0.166	0.165	0.220	0.187	0.025	0.23
	440B												0.213	0.212		0.250	0.025	0.27
#6-32	632		0.09	0.125	0.187	0.250	0.312	0.375	0.437	0.500	0.562	0.625	0.687	0.213	0.212	0.270	0.250	0.025	0.27

TSC7 Self-Clinching Standoffs (for thin sheet metal)

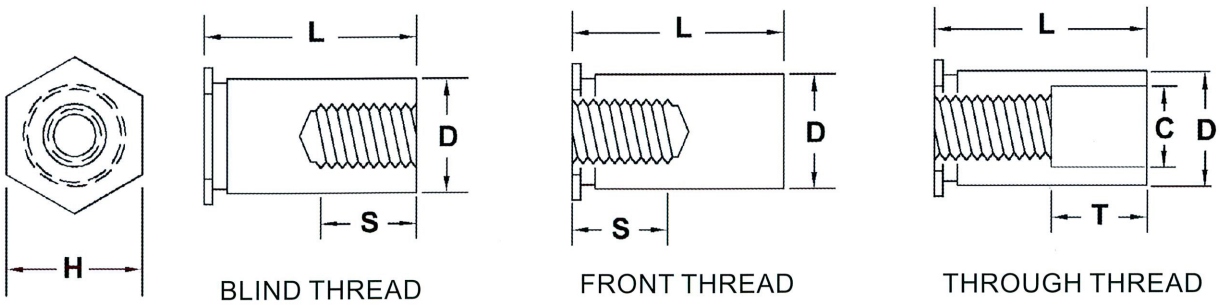

INSTALLATION & PERFORMANCE DATA												
DIMENSION	0.025 IN. (0.64MM) 5052-H34 ALUMINUM						0.025 IN. (0.64MM) COLD-ROLLED STEEL					
	INSTALLATION (kN)		PUSHOUT (N)		TORQUE-OUT (N_m)		INSTALLATION (kN)		PUSHOUT (N)		TORQUE-OUT (N_m)	
	LBS.	KN	LBS.	N	IN. LBS.	N_m	LBS.	KN	LBS.	N	IN. LBS.	N_m
0.165 IN. (4.19MM)	15000	6.7	70	311	6	0.068	2000	8.9	100	445	9	1
0.212 IN. (5.38MM)	18000	8	90	400	11	1.24	2500	11.1	150	667	15	1.7

THE INSTALLATION AND PUSHOUT VALUES REPORTED ARE AVERAGES WHEN ALL INSTALLATION SECIFICATIONS AND PROCEDURES ARE FOLLOWED. VARIATION IN MOUNTING HOLE SIZE, SHEET MATERIAL AND INSTALLATION PROCEDURE WILL AFFECT THIS DATA. PERFORMANCE TESTING OF THIS PRODUCT IN YOUR APPLICATION IS RECOMMENDED. WE WILL GLADLY SEND REPRESENTATIVE SAMPLES FOR THIS PURPOSE.

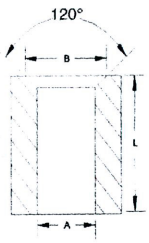

INSTALLATION

_PUNCH OR DRILL PROPERLY SIZED HOLE IN SHEET. DO NOT PERFORM ANY SECONDARY OPERATIONS SUCH AS DEBURRING.

_INSERT STANDOFF THROUGH MOUNTING HOLE OF SHEET AND INTO REQUIRED INSTALLATION ANVIL.

_WITH PUNCH AND ANVIL SURFACES PARALLEL, APPLY ONLY ENOUGH SEQUEEZING FORCE TO EMBED THE STANDOFF'S HEAD FLUSH IN THE SHEET. DRAWING AT RIGHT SHOWS REQUIRED INSTALLATION ANVIL FOR SHEET THICKNESS OF 0.025 TO 0.032 IN./ 0.063 TO 0.81 MM. A CHAMFERED ANVIL IS NOT REQUIRED FOR SHEETS OVER 0.032 IN./ 0.081 MM.

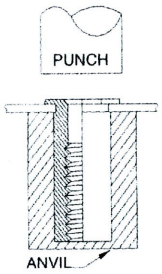

STANDOFF D DIMENSION	ANVIL DIMENSIONS			
	A		B	
	INCHES	MM	INCHES	MM
0.165 IN. / 4.19MM	0.167-0.170	4.24-4.32	0.187-0.194	4.75-4.93
0.212 IN. / 5.38MM	0.213-0.216	5.41-5.49	0.250-0.257	6.35-6-53

TSC8

Blind Pressed Nuts

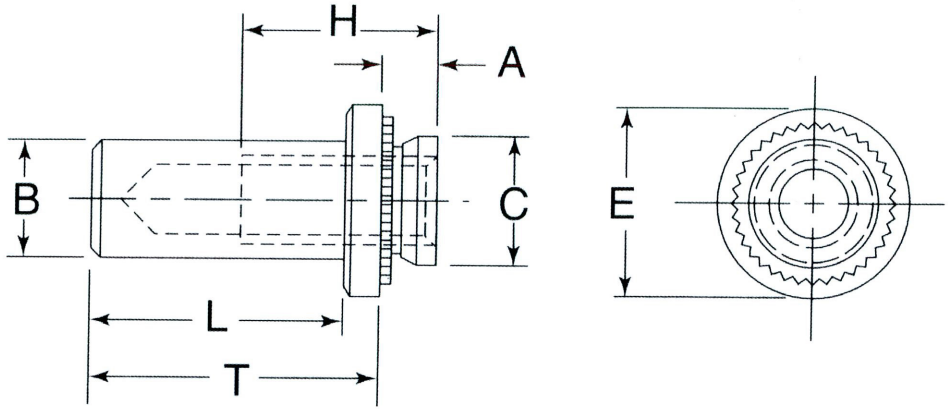

DIMENSIONS & SPECIFICATIONS (MILLIMETERS)											
THREAD SIZE	PART NO.	BARREL DIA. B MAX.	MIN.	+0.08 -0.00	SHANK DIA. C MAX.	L MAX.	A MAX.	E ±0.25	T ±0.25	MIN.	H DEPTH FULL THREAD MIN.
M3x0.5	3501	3.8	1.0	4.25	4.22	8.5	0.97	6.35	9.6	4.8	5.3
	3502		1.4				1.37				
M4x0.7	4701	5.2	1.0	5.40	5.38	9.8	0.97	7.95	11.2	6.9	7.1
	4702		1.4				1.37				
M5x0.8	5801	6.0	1.0	6.40	6.38	9.8	0.97	8.75	11.2	7.1	7.1
	5802		1.4				1.37				
M6x1.0	6101	7.8	1.4	8.75	8.72	12.7	1.37	11.10	14.3	8.6	7.8
	6102		2.3				2.21				

DIMENSIONS & SPECIFICATIONS (INCH)											
THREAD SIZE	PART NO.	BARREL DIA. B MAX.	MIN.	+0.003 -0.000	SHANK DIA. C MAX.	L MAX.	A MAX.	E ±0.01	T ±0.01	MIN.	H DEPTH FULL THREAD MIN.
#4-40	4401	0.149	0.040	0.166	0.165	0.335	0.038	0.25	0.38	0.19	0.21
	4402		0.056				0.054				
#6-32	6321	0.169	0.040	0.187	0.186	0.335	0.038	0.28	0.38	0.22	0.23
	6322		0.056				0.054				
#8-32	8321	0.204	0.040	0.213	0.212	0.385	0.038	0.31	0.44	0.27	0.28
	8322		0.056				0.054				
#10-32	10321	0.235	0.040	0.250	0.249	0.385	0.038	0.34	0.44	0.28	0.28
	10322		0.056				0.054				
1/4-20	4201	0.305	0.056	0.344	0.343	0.500	0.054	0.43	0.56	0.34	0.31
	4202		0.090				0.087				

TSC8
Blind Pressed Nuts

Blind Pressed Nuts are designed to provide extended thread lengths in thin sheet metal. Pressed Nuts provide a seal against the entrance of dirt particles, oils, moisture and corrosive atmospheres. They are usually more economical to use than nut and screw type hardware that requires elaborate seals and special assembly procedures.

INSTALLATION & PERFORMANCE DATA (MILLIMETERS)							
		COLD-ROLLED STEEL			5052-H34 ALUMINUM		
THREAD SIZE	MIN.	INSTALLATION FORCE (kN)	PUSHOUT (N)	TORQUE-OUT (N_m)	INSTALLATION FORCE (kN)	PUSHOUT (N)	TORQUE-OUT (N_m)
M3x0.5	1.0	11	560	1.5	7	440	1.4
M4x0.7	1.0	15	660	3.4	9	490	2.8
M5x0.8	1.0	17	620	4.0	10	490	3.8
M6x1.0	1.6	25	1780	11.9	18	1400	11.3

INSTALLATION & PERFORMANCE DATA (INCH)							
		COLD-ROLLED STEEL			5052-H34 ALUMINUM		
THREAD SIZE	MIN.	INSTALLATION FORCE (LBS.)	PUSHOUT (LBS.)	TORQUE-OUT (IN.-LBS.)	INSTALLATION FORCE (LBS.)	PUSHOUT (LBS.)	TORQUE-OUT (IN.-LBS.)
#4-40	0.040	2500-2700	125	13	1500-1600	100	12
#6-32	0.040	3000-3100	130	38	1850	105	17
#8-32	0.040	3400-3600	135	30	2000	110	25
#10-32	0.040	4000	140	35	2100	110	34
#1/4-20	0.062	6000	400	105	4000	315	100

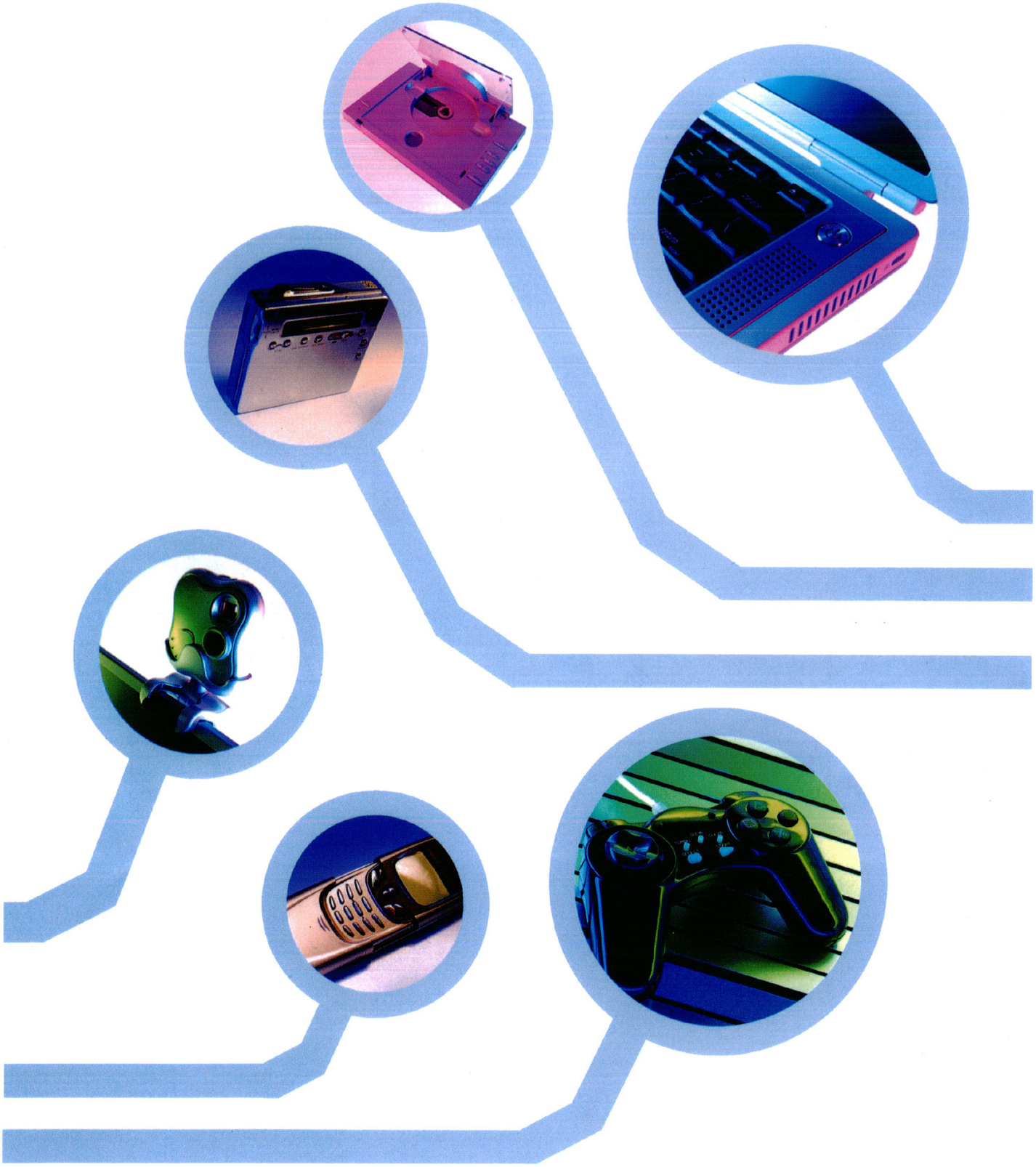

TOP SCREW METAL CORP., LTD.

No. 78, Lane 415, Tay Ho Rd., Sec.2, Ku Yi Li, Changhua, 500, Taiwan, ROC.

www.topscrew.com.tw *E-mail:* topscrew@ms8.hinet.net

Tel:+886-4-7237159 *Fax:* +886-4-7246640